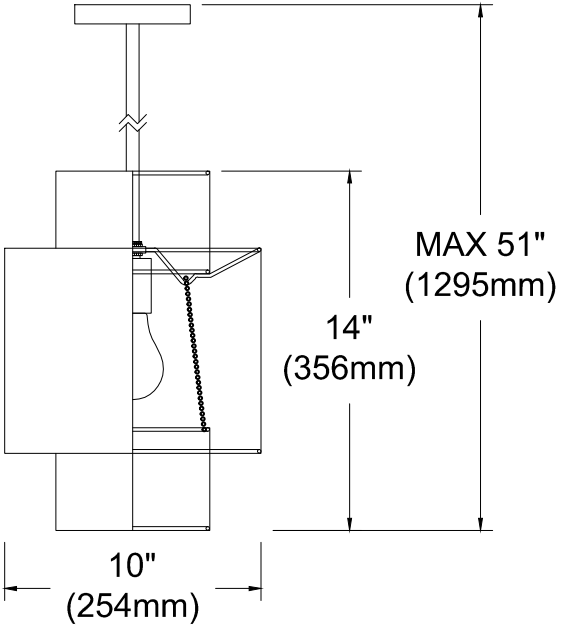PYA-141P