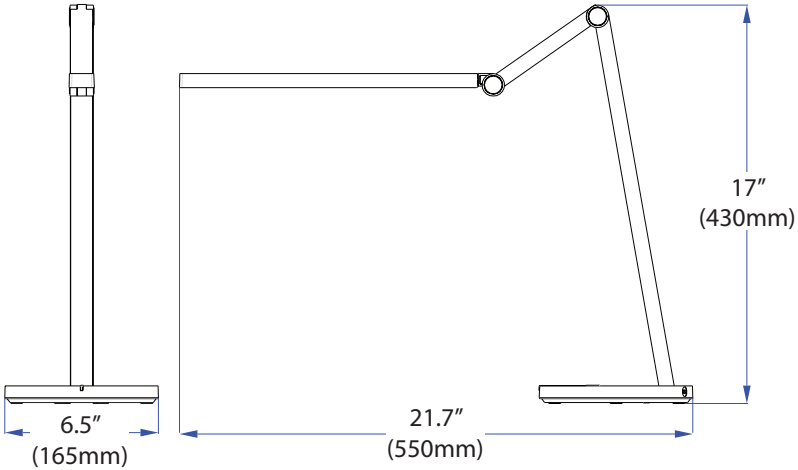MAN-168LEDT