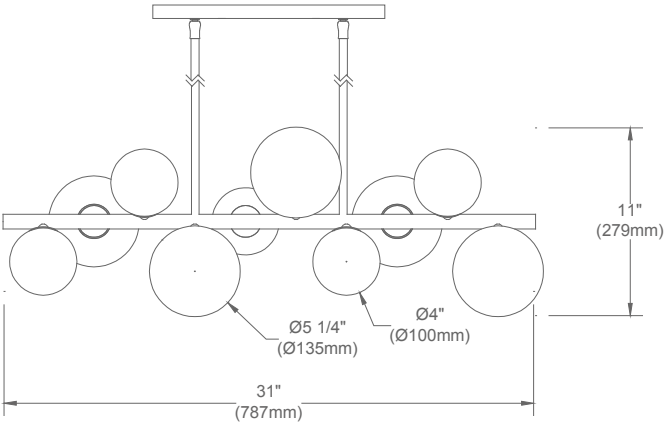

Front View

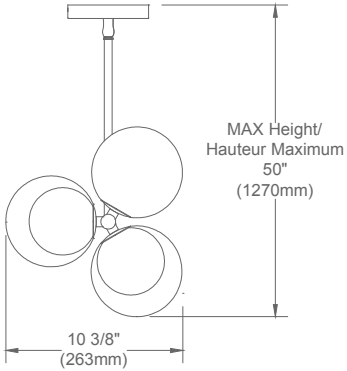

Side View