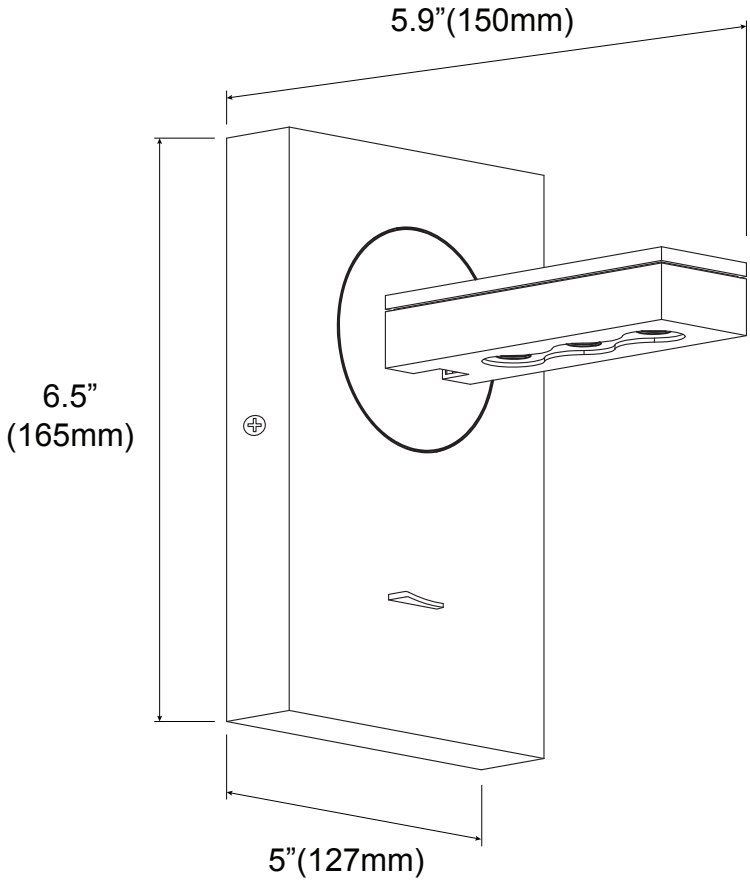
5.9”(150mm)
6.5”
(165mm)
5”(127mm)